Model No. DP2011 6.5MM HIGH SPEED DRILL

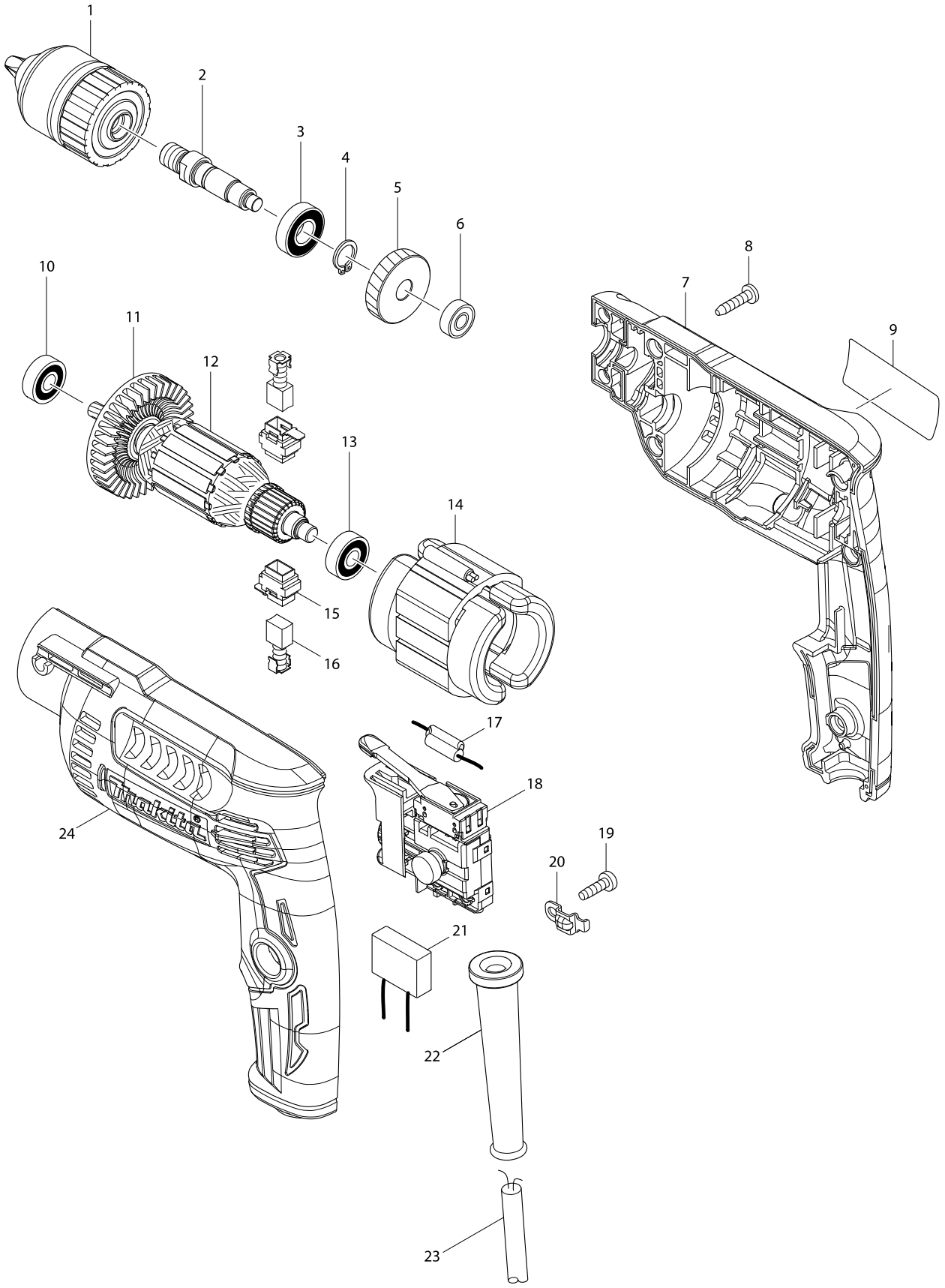

Model No. DP2011 6.5MM HIGH SPEED DRILL

Item	Parts No.	Description	I/C	Qty	N/O	Opt. 1	Opt. 2	Note
001	193203-4	KEYLESS DRILL CHUCK		1				
002	326280-3	SPINDLE		1				
003	210087-6	BALL BEARING 6900LLB		1				
004	961006-2	RETAINING RING S-10		1				
005	227776-6	HELICAL GEAR 34		1				
006	210033-9	BALL BEARING 696ZZ		1				
007	187620-8	HOUSING SET		1				
C10	252175-3	HEX. NUT M5		1				
D10		INC. 24						
008	266326-2	TAPPING SCREW 4X18		7				
009	814K61-8	DP2011 NAME PLATE		1				
010	210017-7	BALL BEARING 607DDW		1				
011	240066-0	FAN 52		1				
012	517694-9	ARMATURE ASS'Y 240V		1				
D10		INC. 10,11,13						
013	210062-2	BALL BEARING 607ZZ		1				
014	521769-8	FIELD ASS'Y 240V		1				
C10	654069-2	RECEPTACLE		1				
015	643936-6	BRUSH HOLDER		2				
016	191962-4	CARBON BRUSH CB-419		1				
017	646047-6	CHOKE COIL		1				
018	650706-6	SWITCH		1				
019	266385-6	TAPPING SCREW 4X14		1				
020	687681-3	STRAIN RELIEF		1				
021	645190-8	NOISE SUPPRESSOR		1				
022	682569-2	CORD GUARD 8-85		1				
023	665383-1	POWER SUPPLY CORD 1.0-2-2.0		1				
024	187620-8	HOUSING SET		1				
C10	252175-3	HEX. NUT M5		1				
D10		INC. 7						
A01	196322-5	DEPTH GAUGE SET		1				
C10	265761-1	THUMB SCREW M5X16		1				
C20	286224-4	CAP 12		1				
C30	322177-4	DEPTH ROD		1				
C40	343525-4	STOPPER POLE RETAINER		1				

Please order the parts with a part number.

Print Date 29/04/2015