Model No. DF333D CORDLESS DRIVER DRILL

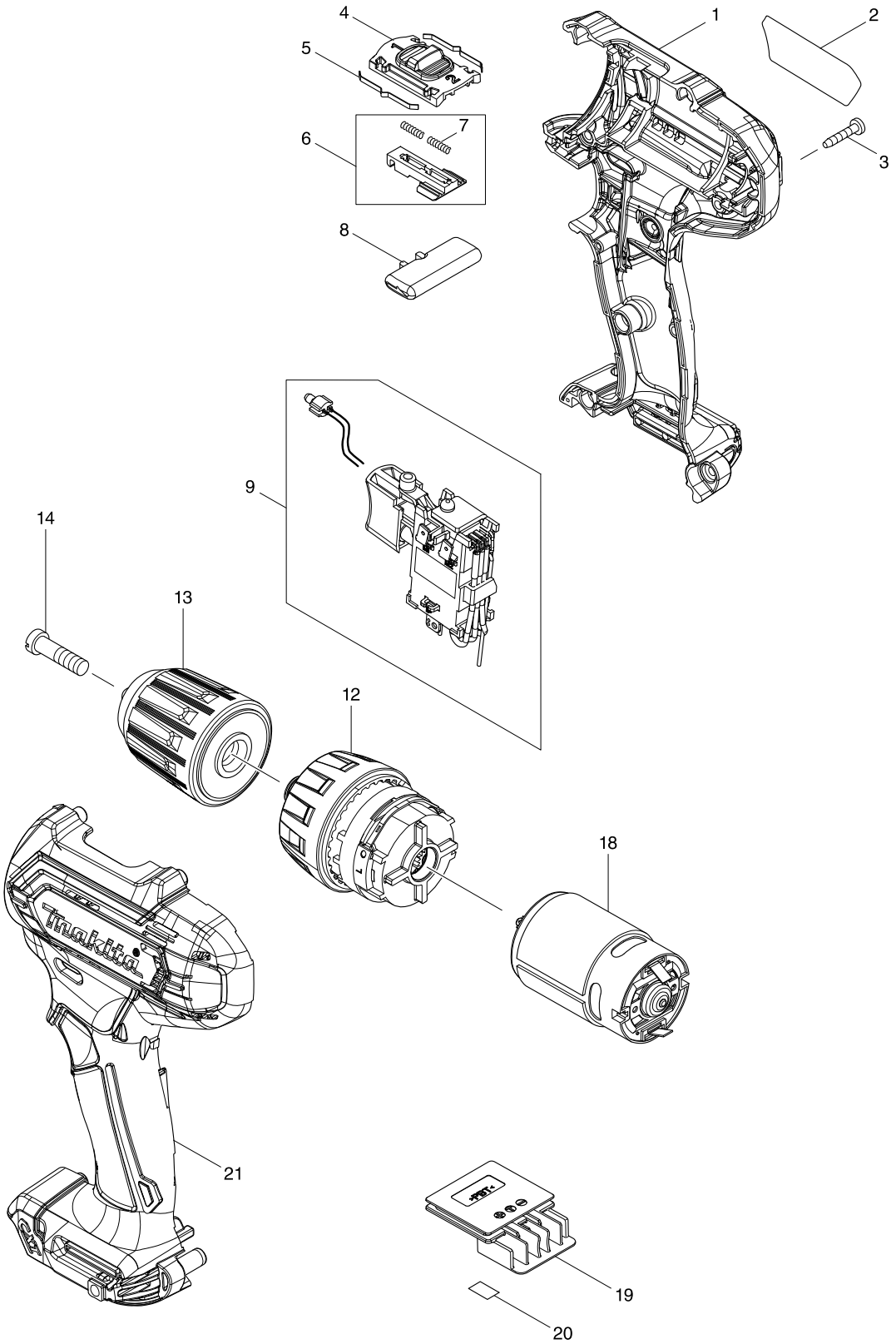

Model No. DF333D CORDLESS DRIVER DRILL

Item	Parts No.	Description	I/C	Qty	N/O	Opt. 1	Opt. 2	Note
001	183K90-5	HOUSING SET		1				
C10	252126-6	HEX. LOCKING NUT M4-7		2				
D10		INC. 21						
002	855E35-4	DF333D NAME PLATE		1				
003	266429-2	TAPPING SCREW 3X16		9				
004	459026-3	SPEED CHANGE LEVER		1				
005	232493-5	LEAF SPRING		2				
006	127127-2	CHANGE LEVER ASSEMBLY		1				
D10		INC. 7						
007	233025-1	COMPRESSION SPRING 2		2				
008	456039-5	F/R CHANGE LEVER		1				
009	632J76-5	SWITCH UNIT		1				
C10	620625-0	LED CIRCUIT		1				
C20	688161-2	LINE FILTER		1				
012	127125-6	GEAR ASSEMBLY		1				
013	763238-5	KEYLESS DRILL CHUCK 10		1				
014	251468-5	- FLAT HEAD SCREW M6X22		1				
018	629395-8	DC MOTOR		1				
019	644813-5	TERMINAL		1				
020	855E42-7	DF333D SERIAL NO. LABEL		1				
021	183K90-5	HOUSING SET		1				
C10	252126-6	HEX. LOCKING NUT M4-7		2				
D10		INC. 1						
A01	251314-2	+ SCREW M4X12		1				
A02	346909-5	HOOK		1				
A03	784244-7	+ BIT 2-50		1				
A04B	821661-1	PLASTIC CARRYING CASE		1				
C10	417724-5	LATCH		2				
A04C	821661-1	PLASTIC CARRYING CASE		1				
C10	417724-5	LATCH		2				
A05B	818P87-2	DF333DWAE MODEL NO. LABEL		1				
A05C	818P91-1	DF333DWME MODEL NO. LABEL		1				
A08B	456128-6	BATTERY COVER		1				
A08C	456128-6	BATTERY COVER		1				
A09B	***DC10WD	DC10WD BATTERY CHARGER		1				
D10		COMPO-PARTS						
A09C	***DC10WD	DC10WD BATTERY CHARGER		1				
D10		COMPO-PARTS						
A10B	197396-9	BATTERY BL1021B SET		2				
A10C	197406-2	BATTERY BL1041B SET		2				
E01	632N11-7	LINE FILTER UNIT		1				

Please order the parts with a part number.

Print Date 15/10/2018