Model No. DVC350 CORDLESS VACUUM CLEANER

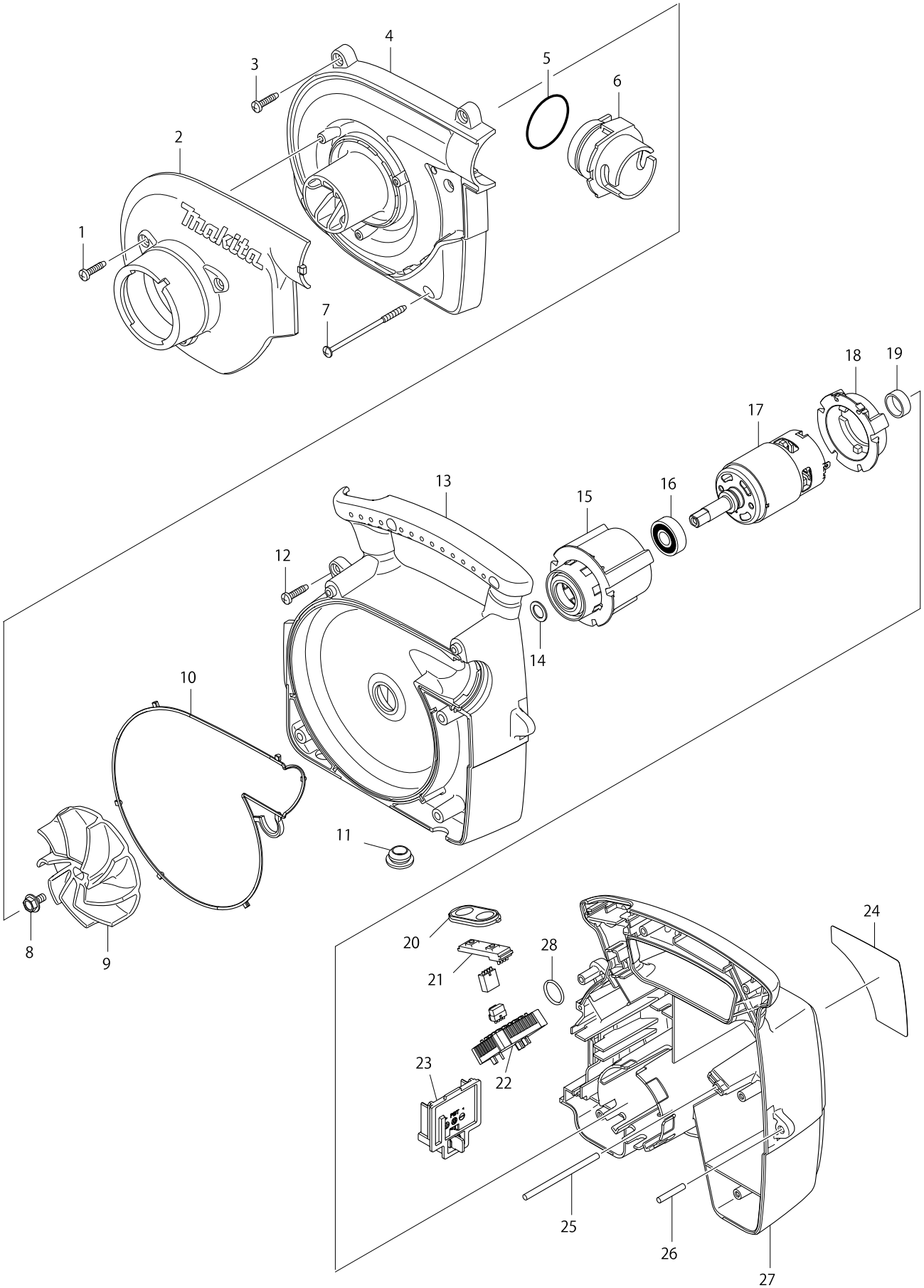

Model No. DVC350 CORDLESS VACUUM CLEANER

Item	Parts No.	Description	I/C	Qty	N/O	Opt. 1	Opt. 2	Note
001	265995-6	TAPPING SCREW 4X18		3				
002	140642-9	FRONT COVER COMPLETE		1				
003	265995-6	TAPPING SCREW 4X18		2				
004	451989-9	FAN COVER		1				
005	213508-7	O RING 38		1				
006	452067-8	JOINT		1				
007	266049-2	TAPPING SCREW 4X75		3				
008	266614-7	HEX. FLANGE HEAD BOLT M5X10		1				
009	240122-6	FAN 86		1				
010	424332-5	SEAL RING		1				
011	286238-3	CAP 19		4				
012	265995-6	TAPPING SCREW 4X18		3				
013	187008-2	MOTOR HOUSING SET		1				
D10		INC. 10,27						
014	267047-9	FLAT WASHER 10		1				
015	424330-9	MOTOR RUBBER RING A		1				
016	210059-1	BALL BEARING 6000DDW		1				
017	629888-5	DC MOTOR		1				
018	424331-7	MOTOR RUBBER RING B		1				
019	421940-3	CAP		1				
020	140463-9	SWITCH PLATE COMPLETE		1				
021	631973-2	SWITCH UNIT		1				
022	638851-7	CONTROLLER UNIT		1				
023	643852-2	TERMINAL		1				
024	815X14-8	DVC350 NAME PLATE		1				
025	268092-7	PIN 4		1				
026	256206-0	PIN 4		1				
027	187008-2	MOTOR HOUSING SET		1				
D10		INC. 10,13						
028	259048-1	RING		1				
A01	122918-6	DUSTBAG ASSEMBLY		1				
A02	140456-6	HOSE COMPLETE 28-2.5		1				
A03	166094-6	SHOULDER BELT		1				
A04	132025-7	NOZZLE ASS'Y		1				
C10	414145-2	JOINT		1				
A05	417766-9	FRONT CUFF 38		1				

Please order the parts with a part number.

Print Date 01/06/2015