Model No. DA332D 10MM CORDLESS ANGLE DRILL

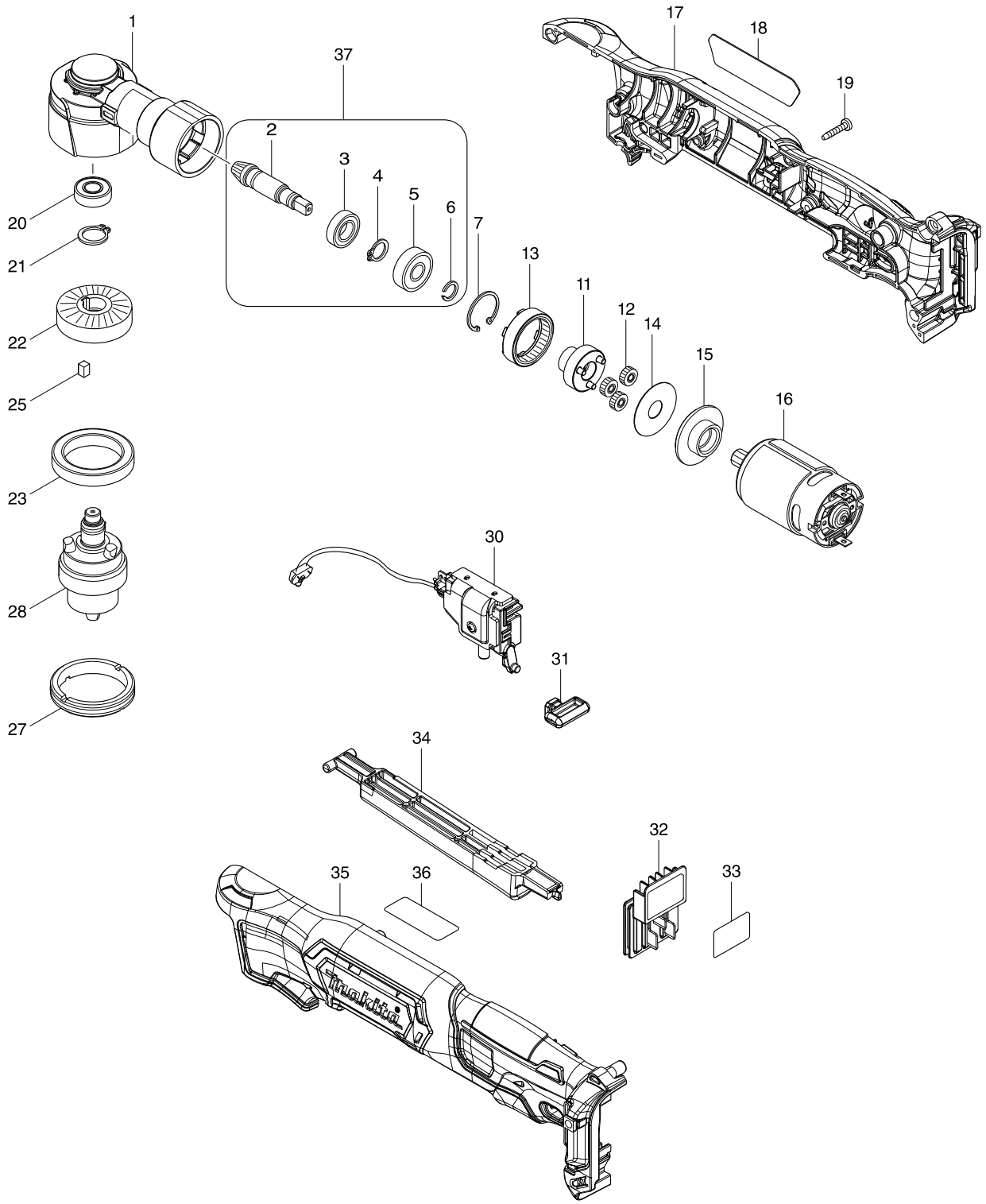

Model No. DA332D 10MM CORDLESS ANGLE DRILL

Item	Parts No.	Description	I/C	Qty	N/O	Opt. 1	Opt. 2	Note
001	319634-1	GEAR HOUSING		1				
002	221570-8	SPIRAL BEVEL GEAR 6		1				
003	210171-7	BALL BEARING 6800ZZ		1				
004	961006-2	RETAINING RING S-10		1				
005	210029-0	BALL BEARING 608ZZ		1				
006	961034-7	RETAINING RING		1				
007	962102-9	RETAINING RING R-22		1				
011	144701-1	CARRIER COMPLETE		1				
012	221572-4	SPUR GEAR 17		3				
013	221569-3	INTERNAL GEAR 48		1				
014	253396-0	FLAT WASHER 10		1				
015	457972-4	MOTOR BRACKET		1				
016	629291-0	DC MOTOR		1				
017	183H38-9	HOUSING SET		1				
C10	252126-6	HEX. LOCKING NUT M4-7		2				
D10		INC. 35						
018	853T57-8	DA332D NAME PLATE		1				
019	266130-9	TAPPING SCREW BIND PT 3X16		9				
020	211166-3	BALL BEARING 698DDW		1				
021	961052-5	RETAINING RING S-12		1				
022	227601-1	SPIRAL BEVEL GEAR 31		1				
023	211423-9	BALL BEARING 6806DDW		1				
025	254201-4	KEY 4		1				
027	285842-5	BEARING RETAINER 36-43		1				
028	763245-8	DRILL CHUCK S10		1				
030	651097-8	SWITCH C3HW-3A-PLF5MS-W		1				
031	450126-2	FR CHANGE LEVER		1				
032	644813-5	TERMINAL		1				
033	853T61-7	DA332D SERIAL NO. LABEL		1				
034	457973-2	SWITCH LEVER		1				
035	183H38-9	HOUSING SET		1				
C10	252126-6	HEX. LOCKING NUT M4-7		2				
D10		INC. 17						
037	135922-6	GEAR ASSEMBLY		1				
D10		INC. 2-6						
A01	784244-7	+ BIT 2-50		1				
A02	346909-5	HOOK		1				
A03	251314-2	+ SCREW M4X12		2				
A04	763450-7	CHUCK KEY S10		1				
A05	457974-0	KEY HOLDER		1				

Please order the parts with a part number.

Print Date 28/08/2017